

Kenex

Engineering safer healthcare environments

X-ray table mounted shields
Specifications & ordering information
Issue 5

For over 55 years, Kenex has built a reputation for designing and manufacturing quality products that help healthcare professionals. Our long standing relationships with many of the industry's leading organisations reflect the quality, reliability, and performance that our customers have come to expect.

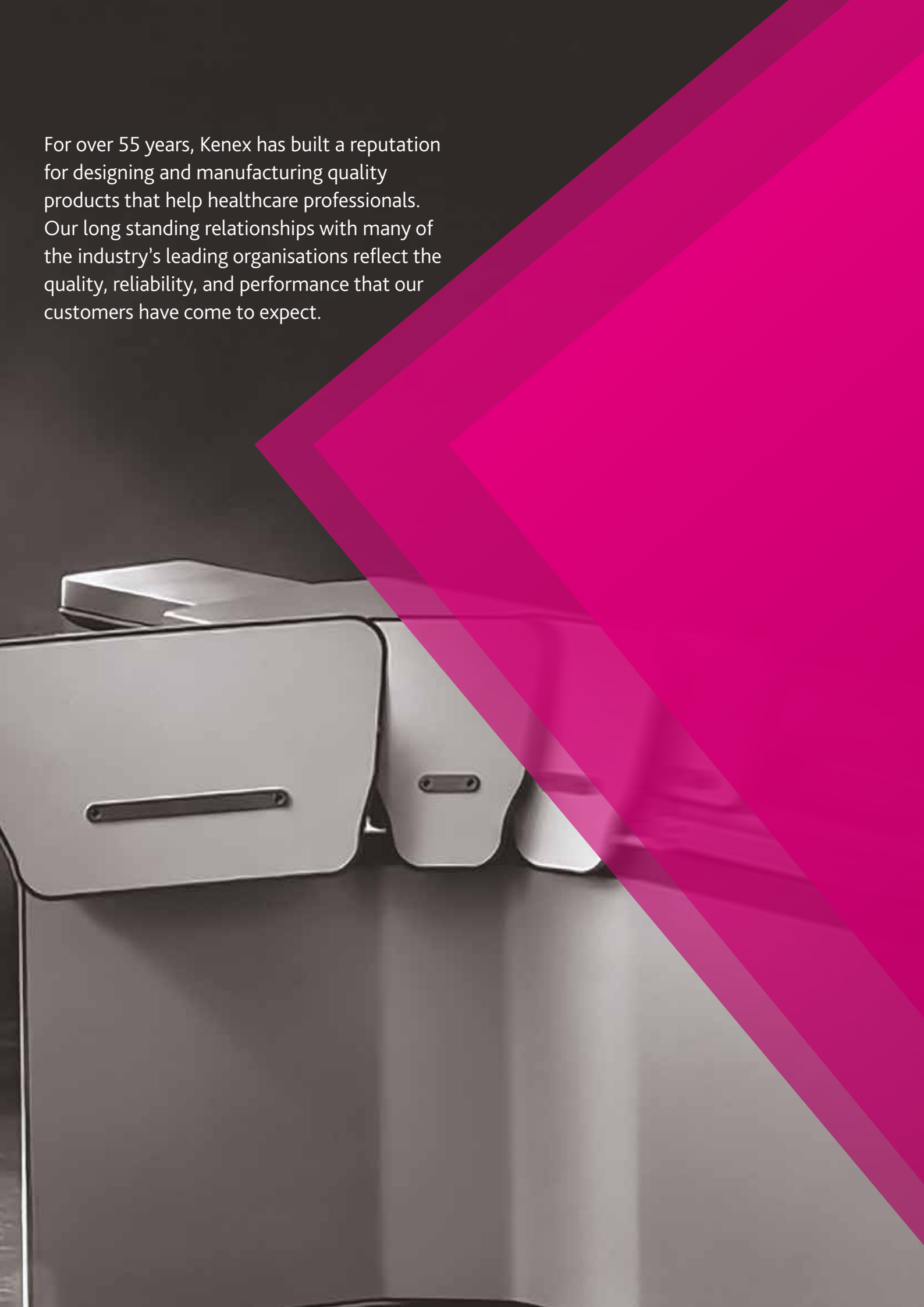

Contents

1 **Tableside mounted shields**
2 Key features

4 **Shield configurations**
4 78 cm wide
5 92 cm wide
6 100 cm wide
7 114 cm wide
8 137 cm wide
9 162 cm wide

10 **Collision resilient shield configurations**
10 92 cm wide
11 114 cm wide
12 137 cm wide
13 162 cm wide

14 **Top shield options**
16 Top shield compatibility

18 **Head end shields**

23 **Foot end shields**

24 **Storage**
24 Wall mounted
26 Mobile

28 **Terms and conditions**

Tableside mounted shields

Kenex lower body shields are designed to significantly reduce exposure to scatter radiation emanating from the table and patient. Their lightweight, durable construction incorporates either an enhanced double friction joint or single friction pivot and pivotal arm supporting a flexible 0.5 mm lead equivalent curtain. Optional semi-flexible upper shields provide enhanced protection for the upper body.

- Kenex table shields can be transferred from one side of the table to the other in seconds by rotating the upper section 180° horizontally, while keeping the pivot arm facing the head end.
- To position the shield, simply slide the mounting bracket onto the tableside accessory rail.
- All shields feature automatic wear compensation to maintain precise joint friction, preventing unwanted curtain movement even when the table is tilted.
- The suspended curtain forms a single 'safe zone of occupancy' for the Radiologist (or Cardiologist).
- The curtain is designed to accommodate under table x-ray tubes without impeding movement.
- When used in conjunction with Kenex ceiling-mounted protection systems, the upper and lower body shields combine to form an effective, easy-to-use barrier against scatter radiation.

Tableside mounted shields
Key features

Unique set-up process

All models can be quickly and easily mounted to either side of the table and repositioned from one side to the other as required.

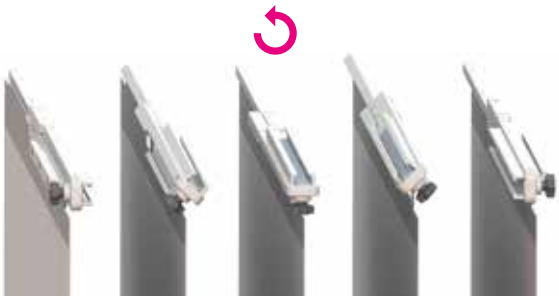

Rail width adjustment

All shields attach securely to the tableside rail and can be configured on-site to fit 25 mm or 28.6 mm rails (up to 11 mm thick).

Other rail sizes are available on request.



Integrated rail for equipment controls

All shields 100 cm wide and above are supplied with two integrated accessory rails (10 × 25 mm fitted; 9.5 × 28.6 mm supplied). These allow equipment controls normally mounted to the tableside rail to be repositioned closer to the user, maximising space and enabling a larger protection zone.

Integrated 10 × 25 mm and 9.5 × 28.6 mm rails are supplied as standard, while selected models are available with a 7.7 × 25 mm rail option (add '/8' to the stock code).



Self-adjusting central link

All shields are fitted with one of the two linkage options shown. Pivot friction is factory-set to prevent unwanted movement, while an internal maintenance-free mechanism maintains the setting to extend service life.

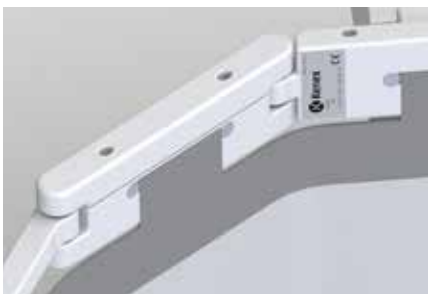



Pivots

Internal 10 mm stainless steel dowels securely locate the shield components and provide stable pivot points, delivering high strength under dynamic loads and long-lasting performance.



Collision resistant

Selected shields (see from page 10) feature a patented mechanism that enables upward movement of the pivot arm. During certain acute C-arm angulations, a collision with a table-mounted shield may occur. The collision-resistant link helps prevent damage to either the C-arm or shield, avoiding disruption to clinical procedures.

These models are fitted with two separate curtains featuring overlapping angled edges, as shown. This design helps maintain radiation protection while the pivot arm moves upward.





Shown with curtains removed

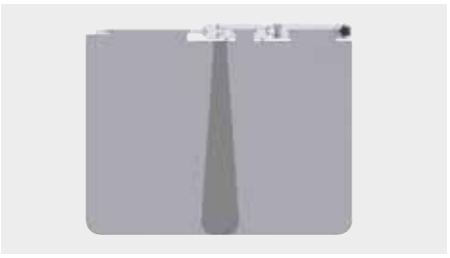

Curtain overlap

Curtain construction

The flexible curtain suspended from each shield provides 0.5 mm Pb protection. It comprises a flexible inner core bonded to a durable outer covering, creating a strong, supple, easy-to-clean curtain that will not delaminate. All shields are supplied with a curtain that easily fits around the shape of the C-arm without restricting its movement.

Alternative construction

Curtains with three overlapping panels are also available. To specify this option, add '/P' to the required stock code. Overlapping-panel curtains are available at no additional cost.



Handle collar

The handle fitted to all shields is manufactured from high-impact glass-reinforced plastic and protected by a solid collar surrounding the handle shaft to minimise damage.



Tableside mounted shields
Shield configurations

The Kenex range of lower body protection detailed in this document range from 78 cm to 162 cm wide. Each is supplied with a 0.5 mm Pb flexible protective curtain. Top shields help extend protection and are either included with a product or can be purchased separately (see page 16 for compatibility).

78 cm wide protective shields

Consists of:

78 cm wide x 70 cm high curtain panel (option available for three overlapping curtain panels).
Single friction pivot for accurate positioning.
Top shields are included with some products, for additional options see page 16 for compatibility.



312/E-006



312/E-006/P



312/E-005

	Curtain panel		Top shields	
			57 cm wide	
78 cm wide Product code	one piece	three overlapping	lift-off (312/DS/3.32)	fold-down (312/DS/3.33)
312/E-005	●			
312/E-005/P		●		
312/E-006	●		●	
312/E-006/P		●	●	
312/E-007	●			●
312/E-007/P		●		●

● Included Additional tops are available, see page 16 for compatibility

92 cm wide protective shields

Consists of:

92 cm wide x 70 cm high curtain panel (option available for three overlapping curtain panels).
Double friction joint for accurate positioning.
Top shields are included with some products, for additional options see page 16 for compatibility.



312/E-011



312/E-012/P

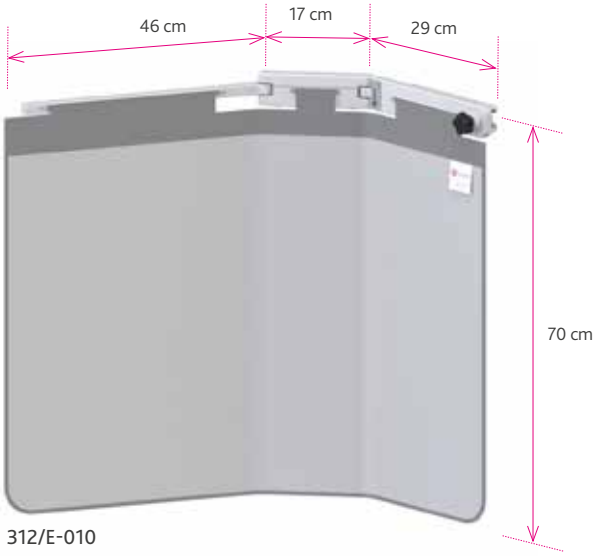

312/E-010

92 cm wide Product code	Curtain panel		Top shields	
			57 cm wide	
	one piece	three overlapping	lift-off (312/DS/3.32)	fold-down (312/DS/3.33)
312/E-010	●			
312/E-010/P		●		
312/E-011	●		●	
312/E-011/P		●	●	
312/E-012	●			●
312/E-012/P		●		●

● Included Additional tops are available, see page 16 for compatibility

100 cm wide protective shields

Consists of:

100 cm wide x 70 cm high curtain panel (option available for three overlapping curtain panels).
Single friction pivot for accurate positioning.
Two 35 cm long integrated accessory rails, 10 x 25 mm (fitted) 9.5 x 28.6 mm (supplied). Option for one 7.7 x 25 x 350 mm rail (fitted).
Top shields are included with some products, for additional options see page 16 for compatibility.



312/E-016

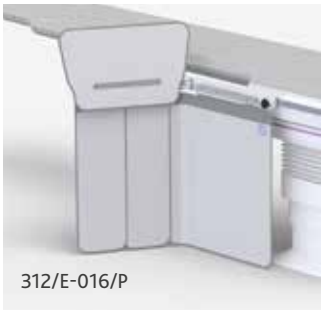

312/E-016/P



312/E-015

100 cm wide Product code	Curtain panel: one piece	Curtain panel: three overlapping	35 cm long integrated accessory rail: 10 x 25 mm (fitted) 9.5 x 28.6 mm (supplied)	35 cm long integrated accessory rail: 7.7 x 25 mm (fitted)	Top shields: 57 cm wide: lift-off (312/DS/3.32)	Top shields: 57 cm wide: fold-down (312/DS/3.33)
312/E-015	●		●			
312/E-015/P		●	●			
312/E-015/8	●			●		
312/E-015/8P		●		●		
312/E-016	●		●		●	
312/E-016/P		●	●		●	
312/E-016/8	●			●	●	
312/E-016/8P		●		●	●	
312/E-017	●		●			●
312/E-017/P		●	●			●
312/E-017/8	●			●		●
312/E-017/8P		●		●		●

● Included Additional tops are available, see page 16 for compatibility

114 cm wide protective shields

Consists of:

114 cm wide x 70 cm high curtain panel (option available for three overlapping curtain panels).
Double friction joint for accurate positioning.
Two 35 cm long integrated accessory rails, 10 x 25 mm (fitted) 9.5 x 28.6 mm (supplied). Option for one 7.7 x 25 x 350 mm rail (fitted).
Top shields are included with some products, for additional options see page 16 for compatibility.



312/E-020/3



312/E-022/P

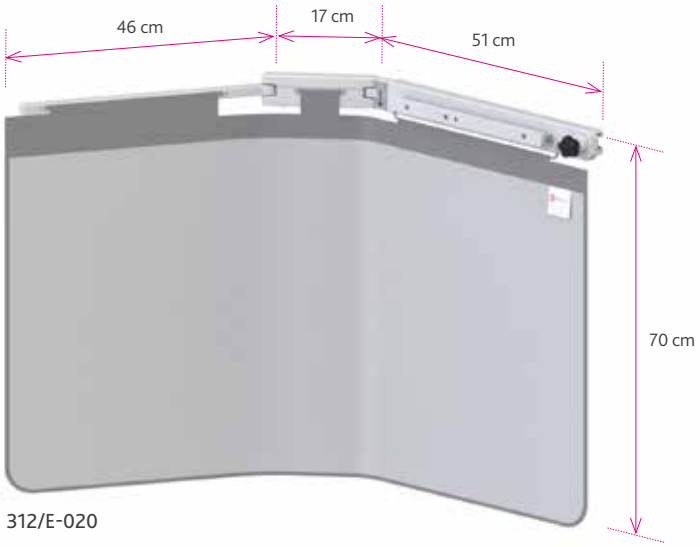

312/E-020

114 cm wide Product code	Curtain panel		35 cm long integrated accessory rail		Top shields			
					57 cm wide		27 cm wide	
	one piece	three overlapping	10 x 25 mm (fitted) 9.5 x 28.6 mm (supplied)	7.7 x 25 mm (fitted)	lift-off (312/DS/3.32)	fold-down (312/DS/3.33)	lift-off (312/DS/3.30)	lift-off (312/DS/3.41)
312/E-020	●		●					
312/E-020/P		●	●					
312/E-020/8	●			●				
312/E-020/8P		●		●				
312/E-020/3	●		●		●		●	●
312/E-020/3/P		●	●		●		●	●
312/E-020/3/8	●			●	●		●	●
312/E-020/3/8P		●		●	●		●	●
312/E-021	●		●		●			
312/E-021/P		●	●		●			
312/E-021/8	●			●	●			
312/E-021/8P		●		●	●			
312/E-022	●		●			●		
312/E-022/P		●	●			●		
312/E-022/8	●			●		●		
312/E-022/8P		●		●		●		

● Included Additional tops are available, see page 16 for compatibility

137 cm wide protective shields

Consists of:

137 cm wide x 75 cm high curtain panel.
Double friction joint for accurate positioning.
Two 57 cm long integrated accessory rails, 10 x 25 mm (fitted) 9.5 x 28.6 mm (supplied).
Top shields are included with some products, for additional options see page 16 for compatibility.



312/DS-039/4/3



312/DS-039/4/3 showing fold-down top

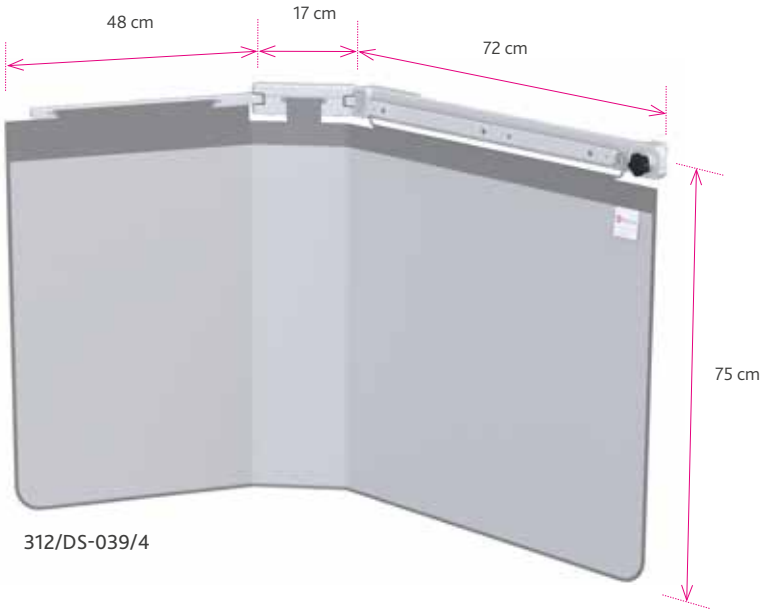

312/DS-039/4

	Curtain panel	57 cm integrated accessory rail	Top shields			
			57 cm wide		27 cm wide	
137 cm wide Product code	one piece	10 x 25 mm (fitted) 9.5 x 28.6 mm (supplied)	lift-off (312/DS/3.32)	fold-down / lift-off (312/DS/3.115)	lift-off (312/DS/3.30)	lift-off (312/DS/3.41)
312/DS-039/4	●	●				
312/DS-039/4/3	●	●		●	●	●
312/DS-0412/4	●	●	●		●	●

● Included Additional tops are available, see page 16 for compatibility

162 cm wide protective shields

Consists of:

162 cm wide x 75 cm high curtain panel.
Two double friction joints for accurate positioning.
Two 57 cm long integrated accessory rails, 10 x 25 mm (fitted) 9.5 x 28.6 mm (supplied).
Top shields are included with some products, for additional options see page 16 for compatibility.



312/DS-039/9/4



312/DS-039/9/4 showing fold-down top

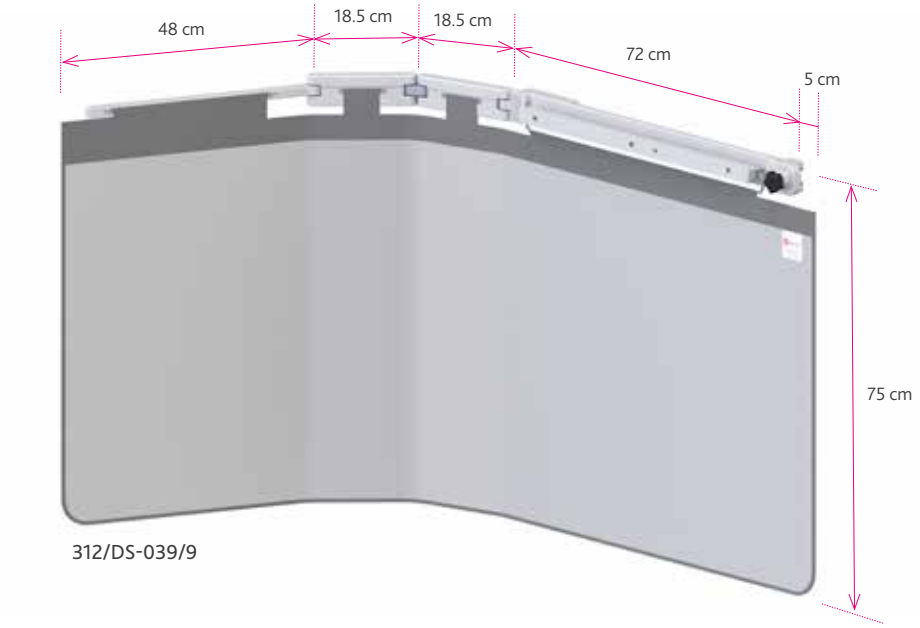

312/DS-039/9

	Curtain panel	57 cm integrated accessory rail	Top shields		
			57 cm wide	27 cm wide	
162 cm wide Product code	one piece	10 x 25 mm (fitted) 9.5 x 28.6 mm (supplied)	fold-down / lift-off (312/DS/3.115)	lift-off (312/DS/3.30)	lift-off (312/DS/3.41)
312/DS-039/9	●	●			
312/DS-039/9/4	●	●	●	● x 2	●

● Included Additional tops are available, see page 16 for compatibility

Tableside mounted shields
Collision resilient shield configurations

Collision-resilient lower body shields feature a unique patented mechanism that allows the pivot arm to deflect upward if it contacts C-arm equipment. Each shield is supplied with a 0.5 mm Pb lead-equivalent curtain. Upper shields are either included or available separately to extend protection; see page 16 for compatibility.

92 cm wide collision resilient protective shields

Consists of:

92 cm wide x 70 cm high curtain panel (312/DS-008 & 312/DS-008/3 are 75 cm high), (option available for three overlapping curtain panels).
Double friction joint for accurate positioning.
Top shields are included with some products, for additional options see page 16 for compatibility.



312/DS-008/3

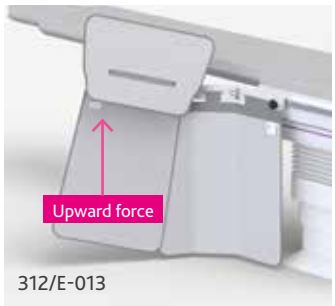

312/E-013

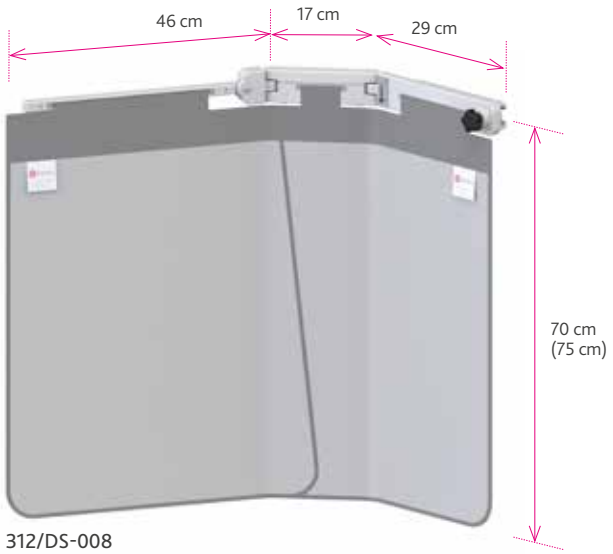

312/DS-008

	Curtain panel		Top shields		
			57 cm wide		27 cm wide
92 cm wide Product code	two piece	three overlapping	lift-off (312/DS/3.32)	fold-down / lift-off (312/DS/3.115)	lift-off (312/DS/3.30)
312/E-013	●		●		
312/E-013/P		●	●		
312/DS-008	●				
312/DS-008/3	●			●	● x 2

● Included Additional tops are available, see page 16 for compatibility

114 cm wide collision resilient protective shields

Consists of:

114 cm wide x 70 cm high curtain panel (option available for three overlapping curtain panels).
Double friction joint for accurate positioning.
Two 35 cm long integrated accessory rails, 10 x 25 mm (fitted) 9.5 x 28.6 mm (supplied). Option for one 7.7 x 25 x 350 mm rail (fitted).
Top shields are included with some products, for additional options see page 16 for compatibility.



312/E-023



312/E-023/P



312/E-023 (shown without top)

114 cm wide Product code	Curtain panel: two piece	Curtain panel: three overlapping	35 cm long integrated accessory rail: 10 x 25 mm (fitted) 9.5 x 28.6 mm (supplied)	35 cm long integrated accessory rail: 7.7 x 25 mm (fitted)	Top shields: 57 cm wide, lift-off (312/DS/3.32)
312/E-023	●		●		●
312/E-023/P		●	●		●
312/E-023/8	●			●	●
312/E-023/8P		●		●	●
312/E-040	●		●		
312/E-040/8	●			●	
312/E-040-P		●	●		
312/E-040-8P		●		●	

● Included Additional tops are available, see page 16 for compatibility

137 cm wide collision resilient protective shields

Consists of:

137 cm wide x 75 cm high curtain panel with a double friction joint for accurate positioning.
Two 57 cm long integrated accessory rails, 10 x 25 mm (fitted) 9.5 x 28.6 mm (supplied).
Top shields are included with some products, for additional options see page 16 for compatibility.



312/DS-039/6/3

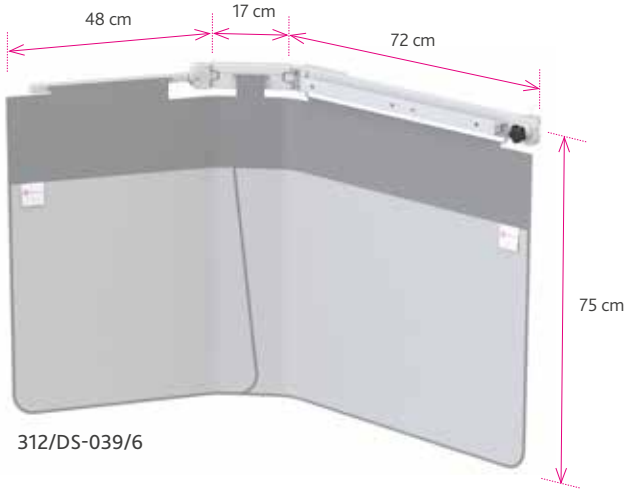

312/DS-039/6

137 cm wide Product code	Curtain panel two piece	57 cm integrated accessory rail 10 x 25 mm (fitted) 9.5 x 28.6 mm (supplied)	Top shields 57 cm wide lift-off (312/DS/3.32)	 fold-down / lift-off (312/DS/3.115)	 27 cm wide lift-off (312/DS/3.30)	 lift-off (312/DS/3.41)
312/DS-039/6	●	●				
312/DS-039/6/3	●	●		●	●	●
312/DS-0412/6	●	●	●		●	●

● Included Additional tops are available, see page 16 for compatibility

137 cm wide collision resilient shield for laterally moving tables

Consists of:

Deep attachment bracket allowing transverse table movement.
137 cm wide x 75 cm high curtain panel with a double friction joint.
Two 65 cm long integrated accessory rails, 10 x 25 mm (fitted) 9.5 x 28.6 mm (supplied).
Top shields are included with some products, for additional options see page 16 for compatibility.


Showing lateral movement of the table


312/DS-060/1/3

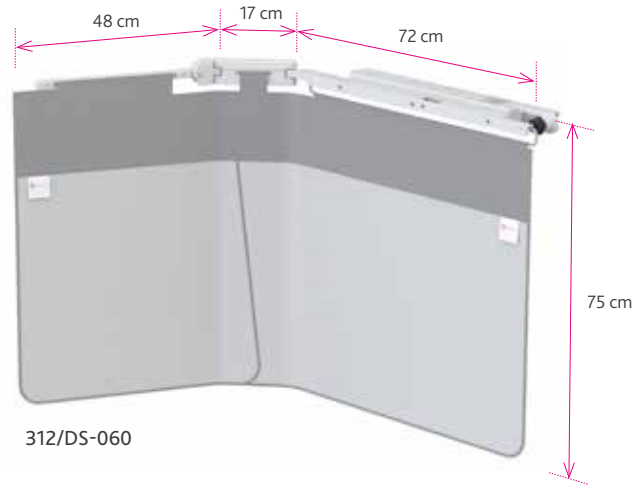

312/DS-060

137 cm wide (deep attachment bracket) Product code	Curtain panel two piece	65 cm integrated accessory rail 10 x 25 mm (fitted) 9.5 x 28.6 mm (supplied)	Top shields 57 cm wide lift-off (312/DS/3.32)	 fold-down / lift-off (312/DS/3.115)	 27 cm wide lift-off (312/DS/3.30)	 lift-off (312/DS/3.122)
312/DS-060	●	●				
312/DS-060/1/3	●	●		●	●	●

● Included Additional tops are available, see page 16 for compatibility

162 cm wide collision resilient protective shields

Consists of:

162 cm wide x 75 cm high curtain panel.
Two double friction joints for accurate positioning.
Two 57 cm long integrated accessory rails, 10 x 25 mm (fitted) 9.5 x 28.6 mm (supplied).
Top shields are included with some products, for additional options see page 16 for compatibility.



312/DS-039/10/4



312/DS-039/10/4 showing fold-down top

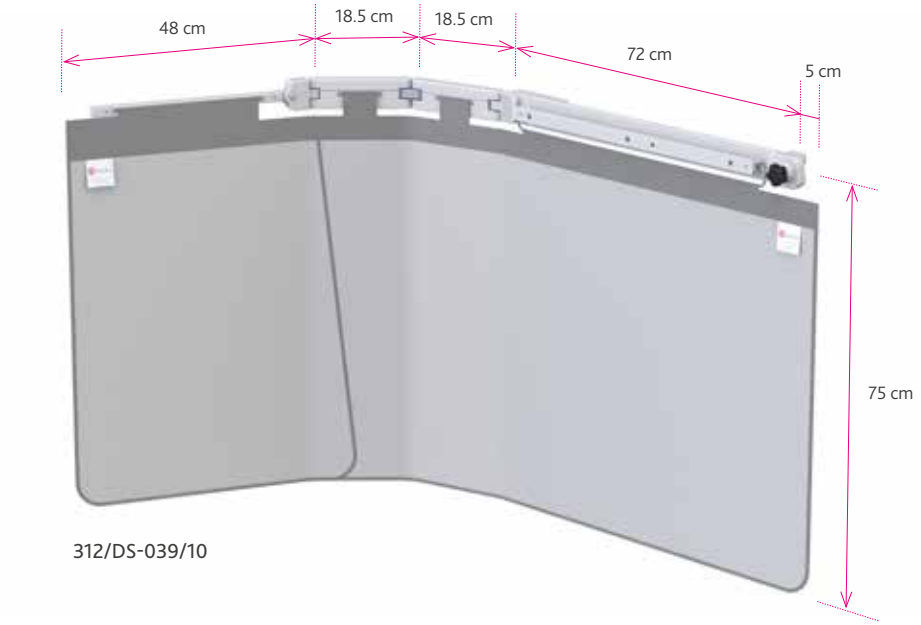

312/DS-039/10

	Curtain panel	57 cm integrated accessory rail	Top shields		
			57 cm wide	27 cm wide	
162 cm wide Product code	two piece	10 x 25 mm (fitted) 9.5 x 28.6 mm (supplied)	fold-down / lift-off (312/DS/3.115)	lift-off (312/DS/3.30)	lift-off (312/DS/3.41)
312/DS-039/10	●	●			
312/DS-039/10/4	●	●	●	● x 2	●

● Included Additional tops are available, see page 16 for compatibility

Tableside mounted shields
Top shield options

Top shields are manufactured using the same 0.5 mm Pb protective material as the suspended curtains of the main shield. They include a flexible plastic material that enables them to stand 25 cm or 15 cm above the tableside rail, and provide additional higher and wider protection to the user. Their unique shape (wider at the top) ensures that no gaps develop as the adjacent tops are pushed towards the patient during procedures.

A list showing compatibility of top shields and main shields is shown on page 16.

Lift-off tops

Solid stainless steel locating pins ensure tops remain in position during use.

27 cm wide cropped tops are manufactured shorter to avoid rail equipment controls.



312/DS/3.32 – Lift-off top 57 cm wide



312/DS/3.30 – Lift-off top 27 cm wide



312/DS/3.41 – Lift-off top 27 cm wide (cropped)

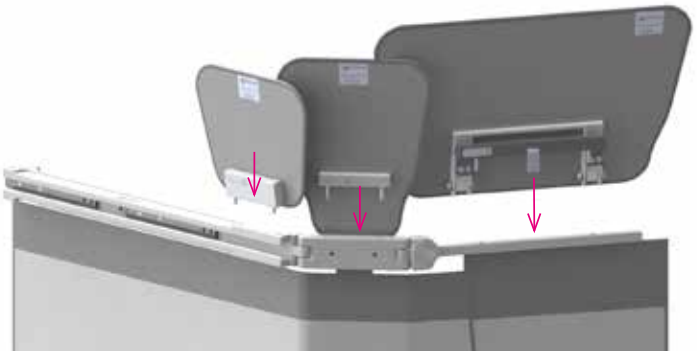

Showing the location of 312/DS-039/6/3 top shields

Fold-down tops

57 cm fold-down tops can be quickly folded away to aid patient access without the need to remove and locate the top elsewhere.

Fold-down/lift-off tops (as above) allow the top shield to be folded down or removed and relocated on an optionally available wall rack (see page 25).



312/DS/3.33 – Fold-down top 57 cm wide

Top shield sets

312/E-025 Standard height set
Set of three standard height lift-off top shields.
Height 25 cm above accessory rail.

Compatible with 312/E-020, 312/E-021, 312/E-022, 312/E-023, 312/DS-039/6 & variants.



312/E-025

312/E-027 Reduced height set
Set of three reduced height lift-off top shields.
Height 15 cm above accessory rail.

Compatible with 312/E-020, 312/E-021, 312/E-022, 312/E-023, 312/DS-039/6 & variants.



312/E-027

Standard height tops

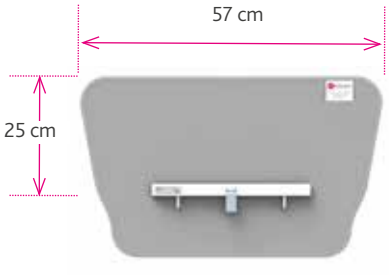

312/DS/3.32/3
Lift-off



312/DS/3.32
Lift-off



312/DS/3.33
Fold-down



312/DS/3.115
Fold-down/lift-off

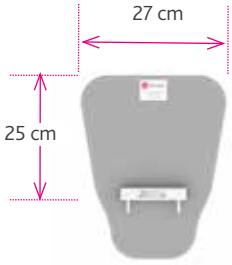

312/DS/3.30
Lift-off



312/DS/3.41
Lift-off



312/DS/3.122
Lift-off

Reduced height tops

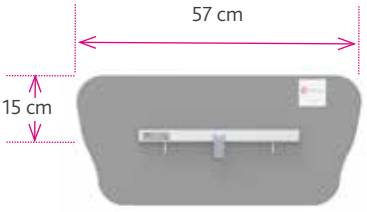

312/DS/3.106
Lift-off



312/DS/3.128
Lift-off



312/DS/3.139
Fold-down



312/DS/3.167
Fold-down/lift-off



312/DS/3.108
Lift-off



312/DS/3.110
Lift-off



312/DS/3.130
Lift-off

Top shield compatibility

● included with shield ○ compatible / optional extra ○ X 2 two can be fitted

Product code	57 cm wide top shields							
	Lift-off (collision)		Lift-off		Fold-down (removable, not lift-off)		Fold-down / lift-off	
	Standard height 312/DS/3.32/3	Reduced height 312/DS/3.106	Standard height 312/DS/3.32	Reduced height 312/DS/3.128	Standard height 312/DS/3.33	Reduced height 312/DS/3.139	Standard height 312/DS/3.115	Reduced height 312/DS/3.167
78 cm wide								
312/E-005			○	○	○	○		
312/E-006			●	○	○	○		
312/E-007			○	○	●	○		
92 cm wide								
312/E-010			○	○	○	○		
312/E-011			●	○	○	○		
312/E-012			○	○	●	○		
100 cm wide								
312/E-015			○	○	○	○		
312/E-016			●	○	○	○		
312/E-017			○	○	●	○		
114 cm wide								
312/E-020			○	○	○	○		
312/E-021			●	○	○	○		
312/E-022			○	○	●	○		
137 cm wide								
312/DS-039/4			○	○			○	○
312/DS-039/4/3			○	○			●	○
312/DS-0412/4			●	○			○	○
162 cm wide								
312/DS-039/9			○	○			○	○
312/DS-039/9/4			○	○			●	○
92 cm wide collision resilient								
312/E-013			●	○			○	○
312/DS-008			○	○			○	○
312/DS-008/3			○	○			●	○
114 cm wide collision resilient								
312/E-023			●	○			○	○
312/E-040			○					
137 cm wide collision resilient								
312/DS-039/6			○	○			○	○
312/DS-039/6/3			○	○			●	○
312/DS-0412/6			●	○			○	○
312/DS-060			○	○			○	○
312/DS-060/1/3			○	○			●	○
162 cm wide collision resilient								
312/DS-039/10			○	○			○	○
312/DS-039/10/4			○	○			●	○

Product code	27 cm wide top shields					
	Lift-off		Lift-off (cropped)		Lift-off (cropped)	
	Standard height 312/DS/3.30	Reduced height 312/DS/3.108	Standard height 312/DS/3.41	Reduced height 312/DS/3.110	Standard height 312/DS/3.122	Reduced height 312/DS/3.130
78 cm wide						
312/E-005	○	○				
312/E-006	○	○				
312/E-007	○	○				
92 cm wide						
312/E-010	○ x 2	○ x 2				
312/E-011	○ x 2	○ x 2				
312/E-012	○ x 2	○ x 2				
100 cm wide						
312/E-015			○	○		
312/E-016			○	○		
312/E-017			○	○		
114 cm wide						
312/E-020	○	○	○	○		
312/E-021	○	○	○	○		
312/E-022	○	○	○	○		
137 cm wide						
312/DS-039/4	○	○	○	○		
312/DS-039/4/3	●	○	●	○		
312/DS-0412/4	●	○	●	○		
162 cm wide						
312/DS-039/9	○ x 2	○ x 2	○	○		
312/DS-039/9/4	● x 2	○ x 2	●	○		
92 cm wide collision resilient						
312/E-013	○ x 2	○ x 2				
312/DS-008	○ x 2	○ x 2				
312/DS-008/3	● x 2	○ x 2				
114 cm wide collision resilient						
312/E-023	○	○	○	○		
312/E-040	○		○			
137 cm wide collision resilient						
312/DS-039/6	○	○	○	○		
312/DS-039/6/3	●	○	●	○		
312/DS-0412/6	●	○	●	○		
312/DS-060	○	○			○	○
312/DS-060/1/3	●	○			●	○
162 cm wide collision resilient						
312/DS-039/10	○ x 2	○ x 2	○	○		
312/DS-039/10/4	● x 2	○ x 2	●	○		

Head end shields

These lower body shields significantly reduce exposure to scatter radiation emanating from the table and patient. They feature a lightweight, durable frame supporting one or more flexible 0.5 mm lead-equivalent curtains.

The shield slides onto a carbon-fibre tabletop and remains securely positioned, even when the table is tilted. Pivoting side wings can be wrapped around the user, extended along the table side, or folded away as required. The pivot arms can be quickly repositioned to allow unrestricted C-arm movement.

Each shield is designed for a specific table model and can be supplied with an optional wall storage rack, if not already included. The rack allows the shield arms to fold inward, minimising required wall space.

313/A2 bespoke head end shields

Bespoke solutions based on individual requirements on sizing, and dependent upon the make of table.
Note: A measurement sheet must be completed when ordering.
This is available as a downloadable pdf from the product page on our website, or by request.

Product code	Wall rack
313/A2 (a measurement sheet will need to be completed)	○

● Included ○ Optional

313/A2-001 & 313/A2-008 for Siemens Healthineers Artis zee tables

313/A2-001
120 cm wide, consists of:
1 x 56 cm fixed middle section
2 x 32 cm pivotal side arms
80 cm high curtain panel
Wall rack

313/A2-008
122 cm wide, consists of:
1 x 58 cm fixed middle section
2 x 32 cm pivotal side arms
80 cm high curtain panel
Wall rack


313/A2-001





Product code	Wall rack
313/A2-001 for use with a 525 mm wide Artis table or 520 mm wide TruSystem 7500 for Artis zee systems	●
313/A2-008 for use with a 550 mm wide Artis zee multipurpose (MP) table	●

● Included ○ Optional

313/A2-010 for GE Healthcare Elegance tables

Consists of:
1 x table adaptation bracket
1 x 37 cm fixed middle section
2 x pivotal side arms (24 cm wide & 68 cm wide)
60 cm high curtain panel
3 x 29 cm wide lift-off tops
Wall rack



313/A2-010 with tops removed



313/A2-010 wall rack

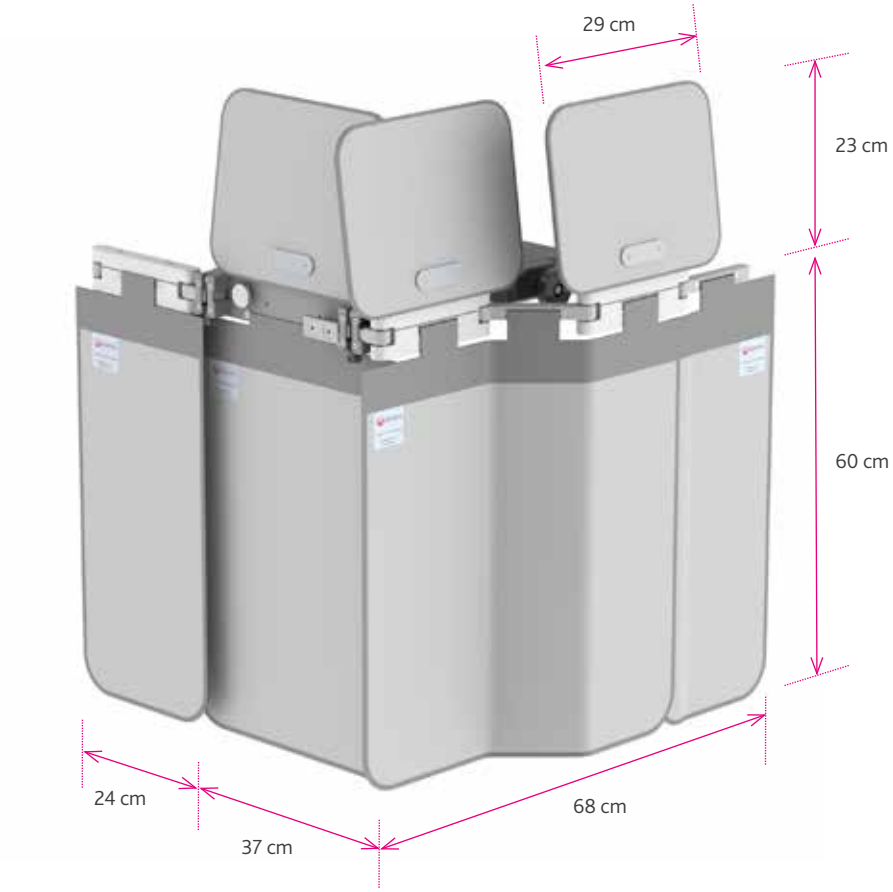

Product code	Wall rack	29 cm wide lift-off top shields
313/A2-010 for use with GE Healthcare Elegance tables	●	● x 3

● Included ○ Optional

313/A2-014 for Cannon Medical (Toshiba) tilt/cradle table, CAT-880B

114 cm wide, consists of:
1 x 50 cm fixed middle section
2 x 32 cm pivotal side arms
1 x 78.5 cm high curtain panel
Wall rack



313/A2-014







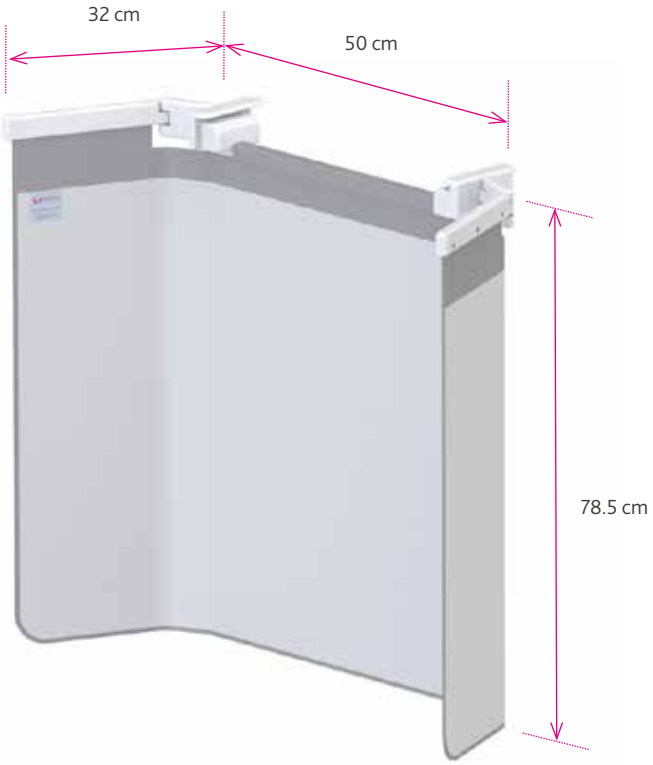

Product code	Wall rack
313/A2-014 for use with a 450 mm wide tilt/cradle table, CAT-880B	●

● Included ○ Optional

313/A2-018 for Baxter Carbon FloatLine and SQ14 X-TRA tables

120 cm wide, consists of:
1 x 56 cm fixed middle section
2 x 32 cm pivotal side arms
1 x 80 cm high curtain panel
Wall rack



313/A2-018







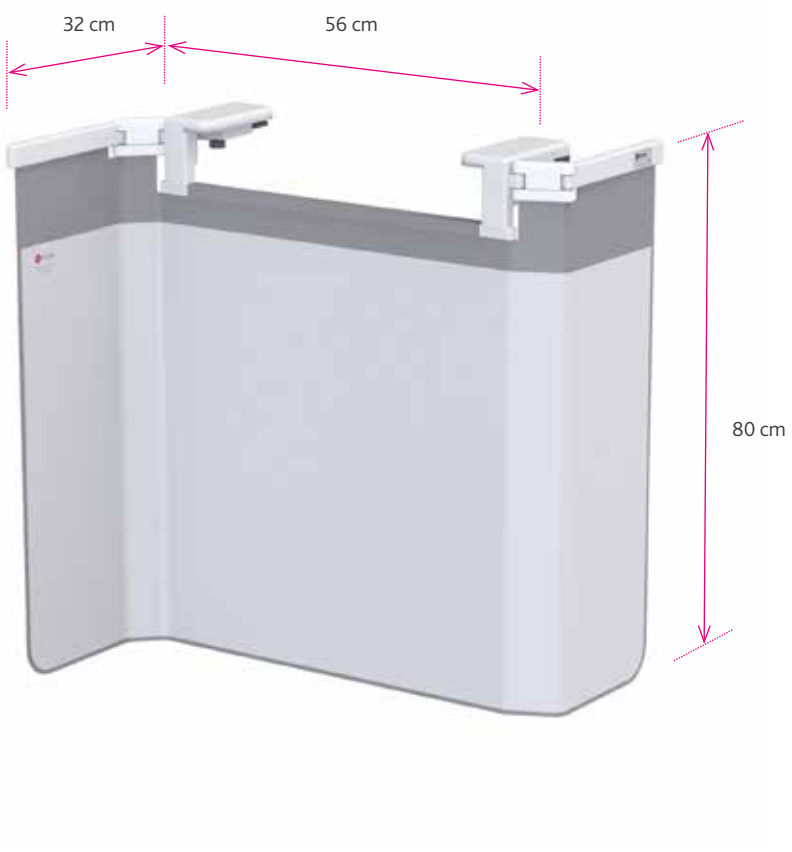

Product code	Wall rack
313/A2-018 for use with 520 mm wide Carbon FloatLine and SQ14 X-TRA tables	●

● Included ○ Optional

313/A3 for Philips Allura AD7 tables

121 cm wide, consists of:
1 x 57 cm fixed middle section
2 x 32 cm pivotal side arms
1 x 80 cm high curtain panel
1 x 57 cm wide fold-down top


313/A3-001






313/A3-002 wall rack

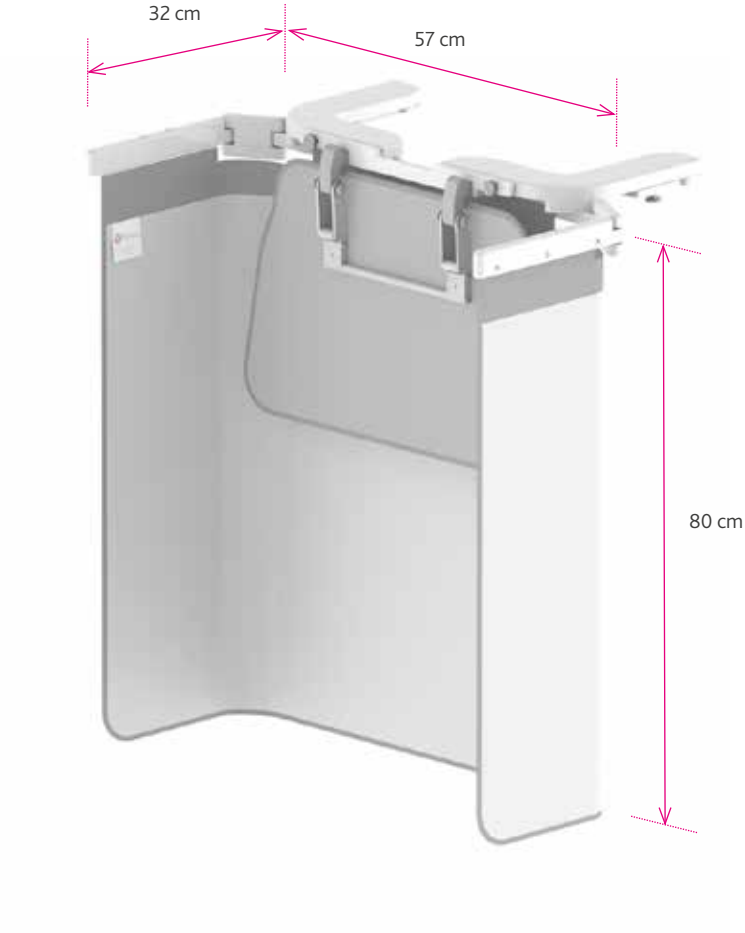

Product code	Wall rack	57 cm fold-down top shield
313/A3-001 for use with a 500 mm wide Allura AD7 table	○	●
313/A3-002 for use with a 500 mm wide Allura AD7 table - including wall rack	●	●

● Included ○ Optional

Upper foot end shields

This shield protects against scatter radiation and also helps protect against possible blood splashes during some interventional procedures.

Designed for use across the table towards the foot end.
Fits onto both 25 mm high tableside accessory rails (7.7 - 10 mm thick).
Lead equivalent protection throughout: 0.5 mm.

Note: A measurement sheet must be completed when ordering.
This is available as a downloadable pdf from the product page on our website, or by request.

311/TC/004 upper foot end table shield

Consists of:
1 x lead acrylic window, approximate size: height 60 cm x width 80 cm
1 x flexible curtain panel suspended below acrylic, height 20 cm
2 x handles for positioning


311/TC/004



311/TC/004

Table shielding storage

312/W-LBT wall rack set

Wall rack set consisting of:
1 x 312/W-LB (see below)
1 x 312/W-TOP (see page 25)



312/W-LBT

312/W-LB wall rack for Kenex lower body shield

These racks provide a convenient storage location when shields are removed from the tableside.

Wall rack for:
1 x Kenex lower body shield (type 312)



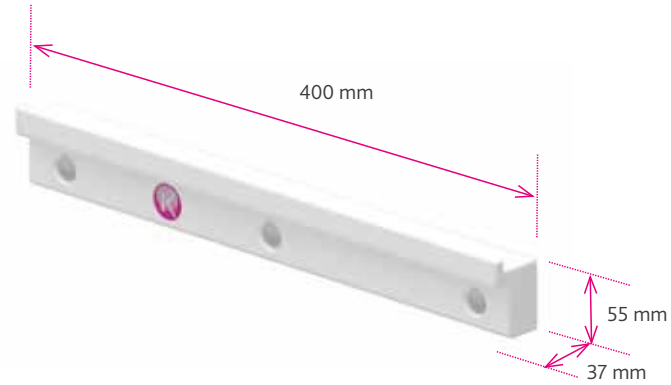

312/W-TOP wall rack for removable Kenex top shields

These racks provide a convenient storage location for top shields when they are removed from the tableside.

Wall rack for:
1 x 57 cm wide top shield
2 x 27 cm wide top shields



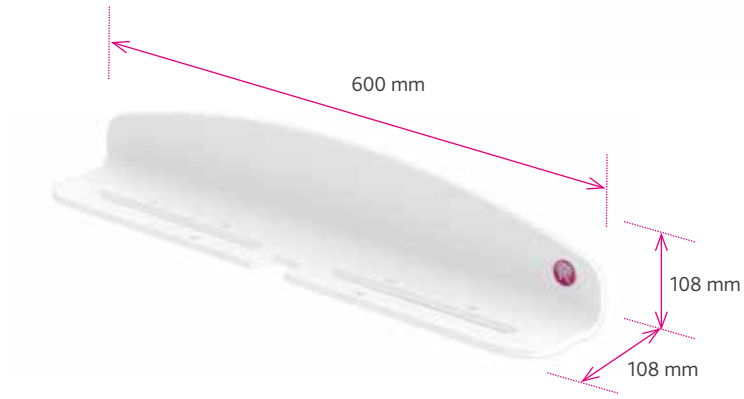

	Compatibility - 57 cm wide top shields							
	Lift-off (collision)		Lift-off		Fold-down (removable, not lift-off)		Fold-down / lift-off	
Product code	Standard height 312/DS/3.32/3	Reduced height 312/DS/3.106	Standard height 312/DS/3.32	Reduced height 312/DS/3.128	Standard height 312/DS/3.33	Reduced height 312/DS/3.139	Standard height 312/DS/3.115	Reduced height 312/DS/3.167
Wall rack 312/W-TOP	O	O	O	O			O	O

O Compatible

	Compatibility - 27 cm wide top shields					
	Lift-off		Lift-off (cropped)		Lift-off (cropped)	
Product code	Standard height 312/DS/3.30	Reduced height 312/DS/3.108	Standard height 312/DS/3.41	Reduced height 312/DS/3.110	Standard height 312/DS/3.122	Reduced height 312/DS/3.130
Wall rack 312/W-TOP	O	O	O	O	O	O

O Compatible

1342/A2 mobile storage racks

A mobile rack that is ideal for use in departments where space for wall storage racks is restricted or unsuitable. It occupies a small floor area when shields are parked and folded, and has large lockable castors which include front guards to push aside any floor cables. Its heavy, easy rolling base safeguards against toppling even when fully loaded.



1342/A2/E-001

1342/A2/E-001
Mobile rack for:
1 x table shield (type 312)
1 x set of top shields (1 x 57 cm & 2 x 27 cm)
1 x head end shield (313/A2-008 or 313/A2-001)





1342/A3/E-001

1342/A3/E -001
Mobile rack for:
1 x table shield (type 312)
1 x set of top shields (1 x 57 cm & 2 x 27 cm)
1 x head end shield (313/A3-001)





1342/A2/F

1342/A2/F
Mobile rack for:
2 x lower body shields (type 312)
2 x top shield sets (2 x 57 cm & 4 x 27 cm)





Product code	Compatibility		
	Lower body shield (type 312)	Head end shield (type 313)	Top shield set (1 x 57 cm & 2 x 27 cm)
1342/A2/E-001 compatible with head end shields 313/A2-008 and 313/A2-001	O	O	O
1342/A3/E-001 compatible with head end shields 313/A3-001	O	O	O
1342/A2/F	O x 2		O x 2 sets

O Compatible

Terms and conditions

Acceptance of orders
Orders are accepted subject to the following business terms and conditions: -

Price list
All prices listed are in GB Pounds Sterling, are provisional only and are subject to alteration without notice. Unless otherwise agreed, prices are for goods Free Carrier Harlow (FCA) in accordance with the International Chamber of Commerce (ICC) trade terms: Incoterms 2020. Prices are exclusive of VAT. VAT if applicable will be charged at the current rate.

Terms of payment
Credit accounts are strictly net payable within 30 days of invoice date.

Carriage
As a general rule carriage will be charged at cost, with shipments made at the purchaser's risk. If transport insurance is requested and undertaken it will be charged to the purchaser as an additional cost. Unless we are given specific instructions we select the manner and route of shipment.

Damage or loss in transit
Any claim made concerning damage or shortages must be made in writing to us within 3 days of delivery of the goods. Any claim for non-delivery must be made in writing to us within 14 days from the date of our invoice. Original packaging must be retained.

Retention of title
Not withstanding that delivery of the goods has been made, they remain the property of Kenex until payment is made in full.

Time of delivery
Every effort will be made to adhere to quoted delivery times. However, no liability can be accepted for any losses incurred by the purchaser for a failure to deliver within the stated period. Delays shall not entitle the purchaser to cancel the order nor to claim damages. We reserve the right to make partial deliveries.

Guarantee and Returns
We will make good at our discretion by repair or by the supply of a replacement, defects that appear in the goods of our manufacture and arise solely from faulty workmanship or materials, provided that the goods are returned to us carriage paid within one year from the date of delivery. Goods subject to fair wear & tear, misuse or inadequate maintenance are excluded. Any claim under this guarantee shall be limited to the cost of the goods. All goods to be returned for warranty investigation or replacement must be agreed and authorised by Kenex. A 'Returns Material Authorisation' form will be issued for completion. Any goods received without the aforementioned documentation may be subject to refusal or additional cost.

Limitation of liability
Other than the statements made in Kenex literature, no warranty is expressed or implied as to the suitability of any product for any purpose. Purchasers must satisfy themselves on this point. Persons authorised to select or use Kenex X-ray protective garments, shields or other products must be aware of the dangers of exposure to radiation.

Specifications & descriptions
Technical data, dimensions, weights and illustrations are typical and not binding. Kenex reserve the right to improve or amend any product without notice.

Patents, trademarks, copyright and designs
Kenex is a registered trademark of Kenex (Electro-Medical) Limited. Kenex products are covered by patents and/or registered designs.
Copyright: All rights reserved. No part of this publication may be reproduced without prior written permission.

Quality management systems and certification
Kenex is compliant and certified according to the following regulations and standards regarding design and manufacture of medical devices: -

2017/745 Medical device regulation (MDR)
2016/425 Personal protective equipment (PPE)
BS EN ISO 13485:2016 (Quality management systems for medical devices)
BS EN 61331-1:2014 (Determination of x-ray attenuation properties)
BS EN 61331-2:2014 (Translucent protective plates)
BS EN 61331-3:2014 (X-ray protective clothing)
BS EN 60601-1:2021 (Medical electrical equipment – basic safety and essential performance)

Quality management systems audited by SGS UK Limited.

Kenex (Electro-Medical) Limited was established in 1970





Kenex (Electro-Medical) Limited
Unit 17, RO24 Greenway
Harlow Business Park
Harlow, Essex
CM19 5QB
England

+44 (0)1279 417241
kenex@kenex.co.uk
www.kenex.co.uk

